ACCUWEIGH

GP SERIES
HIGH-CAPACITY PRECISION BALANCE

by

A&D MERCURY PTY LTD

The GP Series incorporates the Double Leveraged Super Hybrid Sensor SHS Super Hybrid Sensor bringing the most accurate weighing results to the industrial balances in the 12kg to 101kg capacities class.

GP-S SERIES
With Detachable Display (GP-30KS and GP-100KS Only)

GP SERIES

FEATURES

Internal Calibration CAL

Internal calibration uses an internal test mass saving down time and money. Automatic self-calibration occurs when the balance detects ambient temperature changes. The balance also allows the operator to push a single button to demand an automatic calibration.

WinCT

Windows Communication Tools Software provides easy transmission of weighing data from A&D balances to a computer using the RS-232 interface. Quickly export data to Windows applications in a manageable format limited only by the computer's capabilities.

Using a USB/RS-232 Convertor, you can transfer data between a USB-equipped computer to multiple GP balances. This also makes the GP balance hot-swappable.

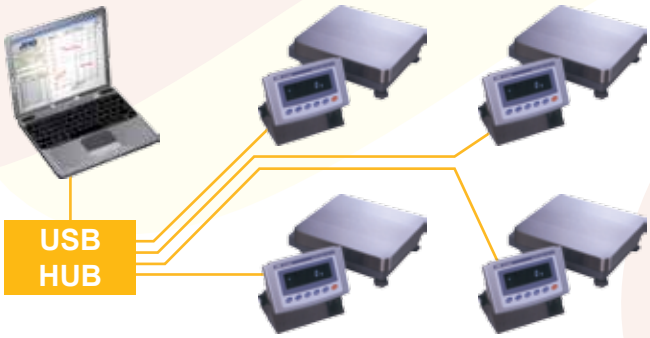

GLP

The balance allows GLP, GMP and ISO balance management through the use of a settable balance ID number and calibration data. The ID number is retained in memory without the need for power.

888 VFD Display

Clear Vacuum Fluorescent Display even in low light. Wide viewing angle eliminates viewing mistakes.

RS-232C STANDARD

Bi-directional communication with a computer or connect direct to a printer.

IP65 IP-65 compliant, resistant to dust water and moisture.

COMPARATOR
Comparator Mode

OFF
Auto Power Off

FDC Full Digital Calibration
Full Digital Calibration

ANIMAL
Animal Weighing Mode

SWING ARM

ACAI Automatic Counting Accuracy Improvement

Automatic counting accuracy improvement continuously recalculates and updates the average piece weight, ensuring optimum count accuracy even with very small parts.

MODEL	GP-12K	GP-20K	GP-22K	GP-30K GP-30KS	GP40K	GP60K	GP-100K GP-100KS	GP-102K
Capacity	12kg	21kg	21kg	31kg	41kg	61kg	101kg	101kg
Resolution	0.1g		1g/0.1g	0.1g	0.5g	1g		10g/1g
Repeatability	0.1g		0.5g/0.1g	0.1g	0.5g	0.7g	1g	5g/1g
Linearity	±0.2g		±1g/±0.2g	±0.2g	±1g		±2g	±10g/±2g
Sensitivity Drift	±3ppm/ºC		±5ppm/ºC	±3ppm/ºC	±5ppm/ºC	±6ppm/ºC		±10ppm/ºC
Weighing Units	g, kg, lb, L OZ, OZ, ct, dwt, OZt, mom, TL, MS, tola, DS, %, pcs (g, ct, and dwt not available with GP-102K)							

OPTIONS

GF-04: Comparator Output (Relay with Buzzer)/RS-232C/ Current Loop
GF-06: Analog/Current Loop Output
GF-07: 5m Connection Cable for GP-30KS & GP-100KS)
GP-20: Underkook (for GP-12K/20K/22K/30K/30KS/40K)
GP-21: Underhook (for GP-60K/100K/100KS/102K)
GP-22: AD-8121 Printer Support

DENSITY DETERMINATION

The GP has a density determination mode ideal for determining the density of solids such as concrete. An optional underhook is available to assist density determination or for weighing magnetic substances.

ACCESSORIES

AX-KO1710-200: RS-232C Cable
AX-SW-128: Foot Swithc

PERIPHERALS

AD-1682: Rechargeable Battery Unit
AD-8920: Remote Display
AD-8121: Dot Matrix Compact Printer
AD-8118B: Universal Printer

DIMENSIONS

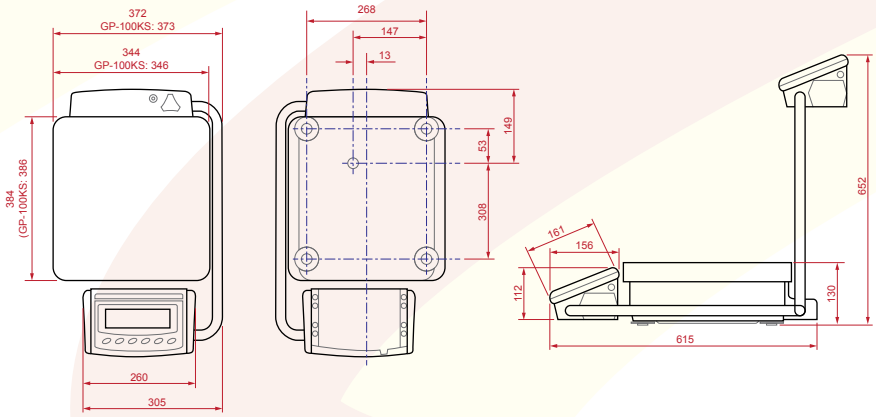

TOP VIEW BOTTOM VIEW SIDE VIEW

Accuweigh Pty Ltd

WESTERN AUSTRALIA (HEAD OFFICE):
PHONE: (08) 9259 5535

SOUTH AUSTRALIA OFFICE:
PHONE: (08) 8447 5011

NEW SOUTH WALES (SYDNEY) OFFICE:
PHONE: (02) 9728 4877

ACCUWEIGH

www.accuweigh.com.au

VICTORIA OFFICE:
PHONE: (03) 9548 5554

NEW SOUTH WALES (NEWCASTLE) OFFICE:
PHONE: (02) 4966 8900

QUEENSLAND OFFICE:
PHONE: (07) 3265 5520